MITSUBISHI ELECTRIC

Air-Conditioners

PUZ-AH/AK·NL
PUY-AH/AK·NL

INSTALLATION MANUAL

FOR INSTALLER

English

For safe and correct use, read this manual and the indoor unit installation manual thoroughly before installing the air-conditioner unit.

MANUEL D'INSTALLATION

POUR L'INSTALLATEUR

Français

Avant d'installer le climatiseur, lire attentivement ce manuel, ainsi que le manuel d'installation de l'appareil intérieur pour une utilisation sûre et correcte.

MANUAL DE INSTALACIÓN

PARA EL INSTALADOR

Español

Para un uso correcto y seguro, lea detalladamente este manual y el manual de instalación de la unidad interior antes de instalar la unidad de aire acondicionado.

Contents

1. Safety precautions 1
2. Installation location 4
3. Installing the outdoor unit 7
4. Installing the refrigerant piping 8
5. Drainage piping work 10
6. Electrical work 11
7. Test run 13
8. Special functions 14
9. System control (Fig. 9-1) 14
10. Low ambient cooling 14

1. Safety precautions

► **Before installing the unit, make sure you read all the "Safety precautions".**
► **Please report to or take consent by the supply authority before connection to the system.**

⚠ **Warning:**
Describes precautions that must be observed to prevent danger of injury or death to the user.

⚠ **Caution:**
Describes precautions that must be observed to prevent damage to the unit.

After installation work has been completed, explain the "Safety precautions," use,and maintenance of the unit to the customer according to the information in the Operation Manual and perform the test run to ensure normal operation. Both the Installation Manual and Operation Manual must be given to the user for keeping. These manuals must be passed on to subsequent users.

⏚ : Indicates a part which must be grounded.

⚠ **Warning:**
Carefully read the labels affixed to the main unit.

MEANINGS OF SYMBOLS DISPLAYED ON THE UNIT

Refrigerant Safety Group A2L	**WARNING** (Risk of fire)	This unit uses a flammable refrigerant. If the refrigerant leaks and comes in contact with fire or a heating part, it will create a harmful gas and there is a risk of fire.
	Read the OPERATING INSTRUCTIONS carefully before operation.	
	Service personnel are required to carefully read the OPERATING INSTRUCTIONS and INSTALLATION MANUAL before operation.	
	Further information is available in the OPERATING INSTRUCTIONS, INSTALLATION MANUAL, and the like.	

⚠ **Warning:**

- **The unit must not be installed by the user. Ask a dealer or an authorized technician to install the unit. If the unit is installed incorrectly, water leakage, electric shock, or fire may result.**
- **For installation work, follow the instructions in the Installation Manual and use tools and pipe components specifically made for use with R454B refrigerant. The R454B refrigerant in the HFC system is pressurized 1.6 times the pressure of usual refrigerants. If pipe components not designed for R454B refrigerant are used and the unit is not installed correctly, the pipes may burst and cause damage or injuries. In addition, water leakage, electric shock, or fire may result.**
- **When installing the unit, use appropriate protective equipment and tools for safety. Failure to do so could cause injuries.**
- **The unit must be installed according to the instructions in order to minimize the risk of damage from earthquakes, typhoons, or strong winds. An incorrectly installed unit may fall down and cause damage or injuries.**
- **The unit must be securely installed on a structure that can sustain its weight. If the unit is mounted on an unstable structure, it may fall down and cause damage or injuries.**
- **If the air conditioner is installed in a small room, measures must be taken to prevent the refrigerant concentration in the room from exceeding the safety limit in the event of refrigerant leakage. Consult a dealer regarding the appropriate measures to prevent the allowable concentration from being exceeded. Should the refrigerant leak and cause the concentration limit to be exceeded, hazards due to lack of oxygen in the room may result.**
- **Ventilate the room if refrigerant leaks during operation. If refrigerant comes into contact with a flame, poisonous gases will be released.**
- **All electric work must be performed by a qualified technician according to local regulations and the instructions given in this manual. The units must be powered by dedicated power lines and the correct voltage and circuit breakers must be used. Power lines with insufficient capacity or incorrect electrical work may result in electric shock or fire.**
- **Use C1220 copper phosphorus, for copper and copper alloy seamless pipes, to connect the refrigerant pipes. If the pipes are not connected correctly, the unit will not be properly grounded and electric shock may result.**
- **Alloys used indoors to join refrigerant containing connections shall have melting point (liquidus temperature) greater than 427°C.**
- **Use only specified cables for wiring. The wiring connections must be made securely with no tension applied on the terminal connections. Also, never splice the cables for wiring (unless otherwise indicated in this document). Failure to observe these instructions may result in overheating or a fire.**
- **The terminal block cover panel of the outdoor unit must be firmly attached. If the cover panel is mounted incorrectly and dust and moisture enter the unit, electric shock or fire may result.**
- **When installing or relocating, or servicing the air conditioner, use only the specified refrigerant (R454B) to charge the refrigerant lines. Do not mix it with any other refrigerant and do not allow air to remain in the lines.**
  If air is mixed with the refrigerant, then it can be the cause of abnormal high pressure in the refrigerant line, and may result in an explosion and other hazards.
  The use of any refrigerant other than that specified for the system will cause mechanical failure or system malfunction or unit breakdown. In the worst case, this could lead to a serious impediment to securing product safety.
- **Use only accessories authorized by Mitsubishi Electric and ask a dealer or an authorized technician to install them. If accessories are incorrectly installed, water leakage, electric shock, or fire may result.**
- **Do not alter the unit. It may cause fire, electric shock, injury or water leakage.**
- **The user should never attempt to repair the unit or transfer it to another location. If the unit is installed incorrectly, water leakage, electric shock, or fire may result. If the air conditioner must be repaired or moved, ask a dealer or an authorized technician.**
- **The appliance should not be stored in a room with continuously operating ignitions sources (for example: open flames, an operating gas appliance or an operating electric heater).**
- **Do not use means to accelerate the defrosting process or to clean, other than those recommended by the manufacturer.**
- **Do not pierce or burn.**
- **After installation has been completed, check for refrigerant leaks. If refrigerant leaks into the room and comes into contact with the flame of a heater or portable cooking range, poisonous gases will be released.**
- **Be aware that refrigerants may not contain odour.**
- **When opening or closing the valve below freezing temperatures, refrigerant may spurt out from the gap between the valve stem and the valve body, resulting in injuries.**

en

1. Safety precautions

- Do not perform pump down work when there is a gas leak. The intake of air or other gases causes abnormally high pressure in the refrigeration cycle, which may cause explosion or injury.
- This appliance is not intended for use by persons (including children) with reduced physical, sensory or mental capabilities, or lack of experience and knowledge, unless they have been given supervision or instruction concerning use of the appliance by a person responsible for their safety. Children should be supervised to ensure that they do not play with the appliance.
  This appliance incorporates an earth connection for functional purposes only.
- When installing or removing the air conditioner, carry the refrigerant detector.
- Do not smoke during work and transportation.
- The appliance shall be stored in a well-ventilated area where the room size corresponds to the room area as specified for operation.
- Keep gas-burning appliances, electric heaters, and other fire sources (ignition sources) away from the location where installation, repair, and other air conditioner work will be performed.
  If refrigerant comes into contact with a flame, poisonous gases may be released.
- When performing brazing work, be sure to ventilate the room sufficiently. Make sure that there are no hazardous or flammable materials nearby. When performing the work in a closed room, small room, or similar location, make sure that there are no refrigerant leaks before performing the work. If refrigerant leaks and accumulates, it may ignite and poisonous gases may be released.
- If refrigerant gas leaks during installation work or operation, ventilate the room, if refrigerant leaks into the room and comes into contact with the flame of heater or portable cooking range, it may ignite or poisonous gases be released.
- Field installed piping should be kept to a minimum.
- Refrigerant piping shall be protected from physical damage.
- Compllance with national gas regulations shall be observed.
- All field joints shall be accessible for inspection prior to being covered or enclosed.

1.1. Before installation

⚠ Caution:

- Do not use the unit in an unusual environment. If the air conditioner is installed in areas exposed to steam, volatile oil (including machine oil), or sulfuric gas, areas exposed to high salt content such as the seaside, or areas where the unit will be covered by snow, the performance can be significantly reduced and the internal parts can be damaged.
- Do not install the unit where combustible gases may leak, be produced, flow, or accumulate. If combustible gas accumulates around the unit, fire or explosion may result.
- The outdoor unit produces condensation during the heating operation. Make sure to provide drainage around the outdoor unit if such condensation is likely to cause damage.
- When installing the unit in a hospital or communications office, be prepared for noise and electronic interference. Inverters, home appliances, high-frequency medical equipment, and radio communications equipment can cause the air conditioner to malfunction or breakdown. The air conditioner may also affect medical equipment, disturbing medical care, and communications equipment, harming the screen display quality.

1.2. Before installation (relocation)

⚠ Caution:

- Be extremely careful when transporting the units. 2 or more persons are needed to handle the unit, as it weighs 20 kg, 44 lbs or more. Do not grasp the packaging bands. Wear protective gloves to remove the unit from the packaging and to move it, as you can injure your hands on the fins or the edge of other parts.
- Be sure to safely dispose of the packaging materials. Packaging materials, such as nails and other metal or wooden parts may cause stabs or other injuries.
- The base and attachments of the outdoor unit must be periodically checked for looseness, cracks or other damage. If such defects are left uncorrected, the unit may fall down and cause damage or injuries.
- Do not clean the air conditioner unit with water. Electric shock may result.
- Tighten all flare nuts to specification using a torque wrench. If tightened too much, the flare nut can break after an extended period and refrigerant can leak out.

• Removal and evacuation

When breaking into the refrigerant circuit to make repairs - or for any other purpose -conventional procedures shall be used. However, for flammable refrigerants it is important that best practice be followed, since flammability is a consideration.

The following procedure shall be adhered to:

- safely remove refrigerant following local and national regulations;
- evacuate;
- purge the circuit with inert gas;
- evacuate;
- continuously flush or purge with inert gas when using flame to open circuit; and
- open the circuit.

The refrigerant charge shall be recovered into the correct recovery cylinders if venting is not allowed by local and national codes.

For appliances containing flammable refrigerants, the system shall be purged with oxygen-free nitrogen to render the appliance safe for flammable refrigerants. This process might need to be repeated several times.

Compressed air or oxygen shall not be used for purging refrigerant systems.

For appliances containing flammable refrigerants, refrigerants purging shall be achieved by breaking the vacuum in the system with oxygen-free nitrogen and continuing to fill until the working pressure is achieved, then venting to atmosphere, and finally pulling down to a vacuum.

This process shall be repeated until no refrigerant is within the system. When the final oxygen-free nitrogen charge is used, the system shall be vented down to atmospheric pressure to enable work to take place.

The outlet for the vacuum pump shall not be close to any potential ignition sources, and ventilation shall be available.

Recovery

When removing refrigerant from a system, either for servicing or decommissioning, it is recommended good practice that all refrigerants are removed safely. When transferring refrigerant into cylinders, ensure that only appropriate refrigerant recovery cylinders are employed. Ensure that the correct number of cylinders for holding the total system charge are available. All cylinders to be used are designated for the recovery refrigerant and labeled for that refrigerant (i.e., special cylinders for the recovery of refrigerant). Cylinders shall be complete with pressure-relief valve and associated shut-off valves in good working order. Empty recovery cylinders are evacuated and, if possible, cooled before recovery occurs. The recovery equipment shall be in good working order with a set of instructions concerning the equipment that is at hand and shall be suitable for the recovery of all appropriate refrigerants including, when applicable, flammable refrigerants. In addition, a set of calibrated weighing scales shall be available and in good working order. Hoses shall be complete with leak-free disconnect couplings and in good condition. Before using the recovery machine, check that it is in satisfactory working order, has been properly maintained and that any associated electrical components are sealed to prevent ignition in the event of a refrigerant release. Consult manufacturer if in doubt. The recovered refrigerant shall be returned to the refrigerant supplier in the correct recovery cylinder, and the relevant waste transfer note arranged. Do not mix refrigerants in recovery units and especially not in cylinders. If compressors or compressor oils are to be removed, ensure that they have been evacuated to an acceptable level to make certain that flammable refrigerant does not remain within the lubricant. The evacuation process shall be carried out prior to returning the compressor to the suppliers. Only electric heating to the compressor body shall be employed to accelerate this process. When oil is drained from a system, it shall be carried out safely.

1.3. Before electric work

⚠ **Caution:**

- **Be sure to install circuit breakers. If not installed, electric shock may result.**
- **Please follow applicable federal, state, or local codes to prevent potential leakage/electric shock. Or install a ground fault interrupt for the prevention of leakage and electric shock.**
- **For the power lines, use standard cables of sufficient capacity. Otherwise, a short circuit, overheating, or fire may result.**
- **When installing the power lines, do not apply tension to the cables. If the connections are loosened, the cables can snap or break and overheating or fire may result.**
- **Be sure to ground the unit. Do not connect the ground wire to gas or water pipes, lighting rods, or telephone grounding lines. If the unit is not properly grounded, electric shock may result.**
- **Use circuit breakers (ground fault interrupter, isolating switch (+B fuse), and molded case circuit breaker) with the specified capacity. If the circuit breaker capacity is larger than the specified capacity, breakdown or fire may result.**

1.4. Before starting the test run

⚠ **Caution:**

- **Turn on the main power switch more than 12 hours before starting operation. Starting operation just after turning on the power switch can severely damage the internal parts. Keep the main power switch turned on during the operation season.**
- **Before starting operation, check that all panels, guards and other protective parts are correctly installed. Rotating, hot, or high voltage parts can cause injuries.**
- **Do not touch any switch with wet hands. Electric shock may result.**
- **Do not touch the refrigerant pipes with bare hands during operation. The refrigerant pipes are hot or cold depending on the condition of the flowing refrigerant. If you touch the pipes, burns or frostbite may result.**
- **After stopping operation, be sure to wait at least five minutes before turning off the main power switch. Otherwise, water leakage or breakdown may result.**

1.5. Using R454B refrigerant air conditioners

⚠ **Caution:**

- **Use C1220 copper phosphorus, for copper and copper alloy seamless pipes, to connect the refrigerant pipes. Make sure the insides of the pipes are clean and do not contain any harmful contaminants such as sulfuric compounds, oxidants, debris, or dust. Use pipes with the specified thickness. (Refer to 4.1.) Note the following if reusing existing pipes that carried R22, R410A refrigerant.**
  - Replace the existing flare nuts and flare the flared sections again.
  - Do not use thin pipes. (Refer to 4.1.)
- **Store the pipes to be used during installation indoors and keep both ends of the pipes sealed until just before brazing. (Leave elbow joints, etc. in their packaging.) If dust, debris, or moisture enters the refrigerant lines, oil deterioration or compressor breakdown may result.**
- **Use ester oil, ether oil, alkylbenzene oil (small amount) as the refrigeration oil applied to the flared sections. If mineral oil is mixed in the refrigeration oil, oil deterioration may result.**
- **Do not use refrigerant other than R454B refrigerant. If another refrigerant is used, the chlorine will cause the oil to deteriorate.**
- **Use the following tools specifically designed for use with R454B refrigerant. The following tools are necessary to use R454B refrigerant. Contact your nearest dealer for any questions.**

Tools (for R454B)	
Gauge manifold	Flare tool
Charge hose	Size adjustment gauge
Gas leak detector	Vacuum pump adapter
Torque wrench	Electronic refrigerant charging scale

- **Be sure to use the correct tools. If dust, debris, or moisture enters the refrigerant lines, refrigeration oil deterioration may result.**
- **Do not use a charging cylinder. If a charging cylinder is used, the composition of the refrigerant will change and the efficiency will be lowered.**

2. Installation location

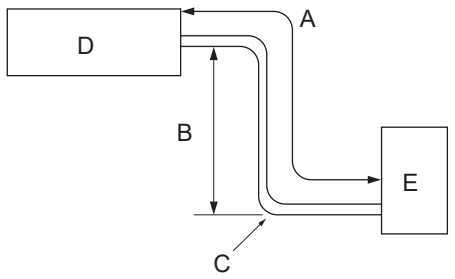

Fig. 2-1

2.1. Refrigerant pipe (Fig. 2-1)

► **Check that the difference between the heights of the indoor and outdoor units, the length of refrigerant pipe, and the number of bends in the pipe are within the limits shown below.**

Models	(A) Pipe length (one way)	(B) Height difference	(C) Number of bends (one way)
PUZ-AK12NL PUZ-AK18NL	Max. 30 m, 100 ft	Max. 30 m, 100 ft	Max. 15
PUZ-AH24NL PUZ-AH30NL	Max. 50 m, 165 ft *1	Max. 30 m, 100 ft	Max. 15
PUY-AK12NL PUY-AK18NL	Max. 50 m, 165 ft	Max. 30 m, 100 ft	Max. 15
PUY-AH24NL PUY-AH30NL	Max. 69 m, 225 ft *1	Max. 30 m, 100 ft	Max. 15

*1. If outdoor unit is connected to the A-COIL indoor unit (PAA), pipe length is “Max. 30 m, 100 ft”.

- Height difference limitations are binding regardless of which unit, indoor or outdoor, is positioned higher.
  (D) Indoor unit
  (E) Outdoor unit

■ **PUZ-AK12NL**
PUZ-AK18NL
PUY-AK12NL
PUY-AK18NL

■ **PUZ-AH24NL**
PUZ-AH30NL
PUY-AH24NL
PUY-AH30NL

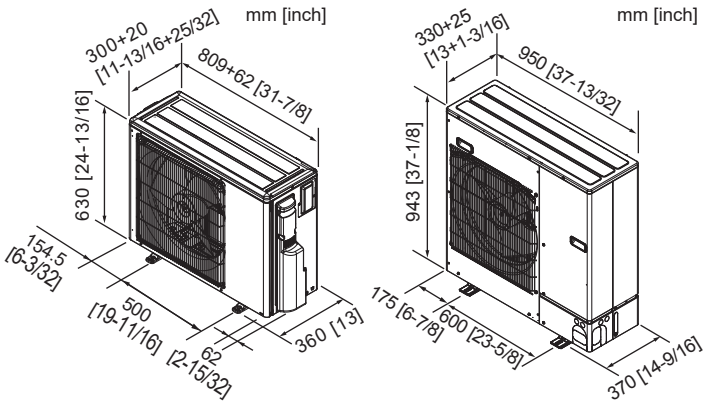

Fig. 2-2

2.2. Choosing the outdoor unit installation location

- Avoid locations exposed to direct sunlight or other sources of heat.
- Select a location from which noise emitted by the unit will not inconvenience neighbors.
- Select a location permitting easy wiring and pipe access to the power source and indoor unit.
- Avoid locations where combustible gases may leak, be produced, flow, or accumulate.
- Note that water may drain from the unit during operation.
- Select a level location that can bear the weight and vibration of the unit.
- Avoid locations where the unit can be covered by snow. In areas where heavy snow fall is anticipated, special precautions such as raising the installation location or installing a hood on the air intake must be taken to prevent the snow from blocking the air intake or blowing directly against it. This can reduce the airflow and a malfunction may result.
- Avoid locations exposed to oil, steam, or sulfuric gas.
- Use the transportation handles of the outdoor unit to transport the unit. If the unit is carried from the bottom, hands or fingers may be pinched.

⚠ **Warning:**

- **Do not install the unit in an enclosed area in order to prevent the refrigerant from accumulating when it leaks.**

2.3. Outline dimensions (Outdoor unit) (Fig. 2-2)

2.4. Ventilation and service space

2.4.1. Windy location installation

When installing the outdoor unit on a rooftop or other location unprotected from the wind, situate the air outlet of the unit so that it is not directly exposed to strong winds. Strong wind entering the air outlet may impede the normal airflow and a malfunction may result.

The following shows three examples of precautions against strong winds.

1. Face the air outlet towards the nearest available wall about 500 mm, 19-11/16 inch away from the wall. (Fig. 2-3)
2. Install an optional air outlet guide and air guide if the unit is installed in a location where strong winds from a typhoon, etc. may directly enter the air outlet. (Fig. 2-4)
   (A) Air outlet guide
3. Position the unit so that the air outlet blows perpendicularly to the seasonal wind direction, if possible. (Fig. 2-5)
   (B) Wind direction

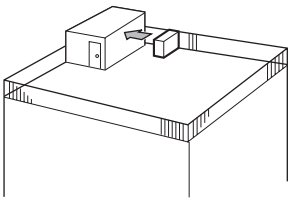

Fig. 2-3

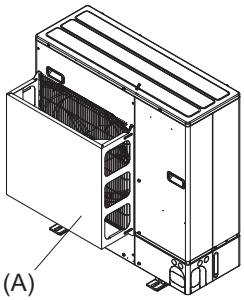

Fig. 2-4

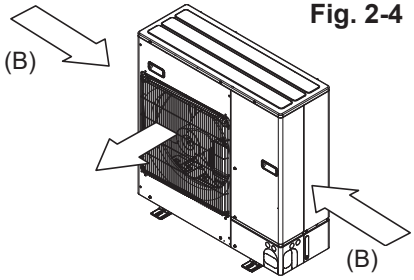

Fig. 2-5

en

2. Installation location

2.4.2. When installing a single outdoor unit

Minimum dimensions are as follows, except for Max., meaning Maximum dimensions, indicated.

1. Obstacles at rear only (Fig. 2-6)
2. Obstacles at rear and above only (Fig. 2-7)
3. Obstacles at rear and sides only (Fig. 2-8)
   - ∗ 350 mm, 13-25/32 inch for PU*-A12NKA8, PU*-A18NKA8
4. Obstacles at front only (Fig. 2-9)
5. Obstacles at front and rear only (Fig. 2-10)
6. Obstacles at rear, sides, and above only (Fig. 2-11)
   - ∗ 350 mm, 13-25/32 inch for PU*-AK12NL, PU*-AK18NL
   - Do not install the optional air outlet guides for upward airflow.

2.4.3. When installing multiple outdoor units

Leave 350 mm, 13-25/32 inch for PU*-AK12NL, PU*-AK18NL and 10 mm, 13/32 inch for PU*-AH24NL, PU*-AH30NL space or more between the units.

1. Obstacles at rear only (Fig. 2-12)
2. Obstacles at rear and above only (Fig. 2-13)
   - No more than three units must be installed side by side. In addition, leave space as shown.
   - Do not install the optional air outlet guides for upward airflow.
3. Obstacles at front only (Fig. 2-14)
4. Obstacles at front and rear only (Fig. 2-15)
5. Single parallel unit arrangement (Fig. 2-16)
   - ∗ When using an optional air outlet guide installed for upward airflow, the clearance is 500 mm, 19-11/16 inch or more.
6. Multiple parallel unit arrangement (Fig. 2-17)
   - ∗ When using an optional air outlet guide installed for upward airflow, the clearance is 1000 mm, 39-3/8 inch or more.
7. Stacked unit arrangement (Fig. 2-18)
   - The units can be stacked up to 2 units high.
   - No more than two stacked units must be installed side by side. In addition, leave space as shown.

mm [inch]

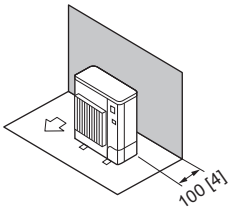

Fig. 2-6

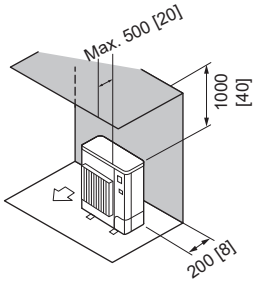

Fig. 2-7

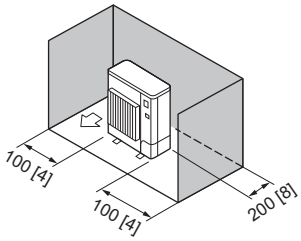

Fig. 2-8

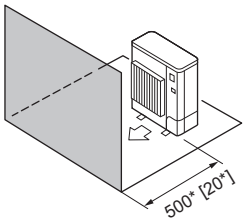

Fig. 2-9

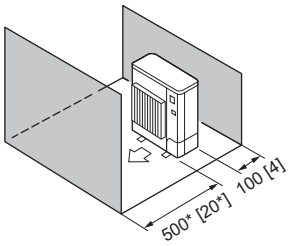

Fig. 2-10

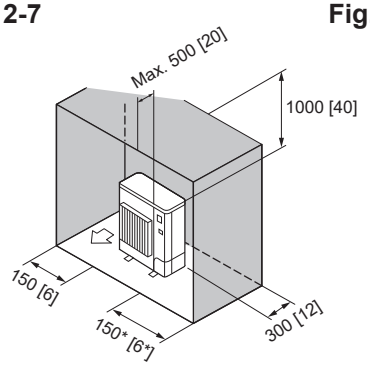

Fig. 2-11

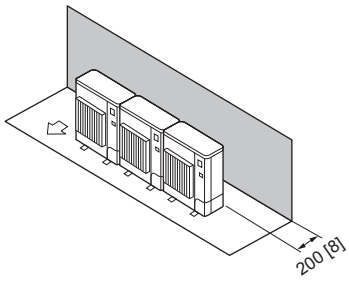

Fig. 2-12

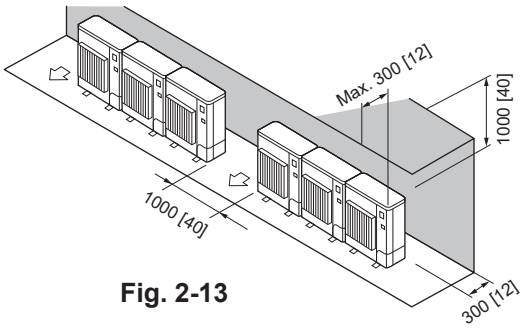

Fig. 2-13

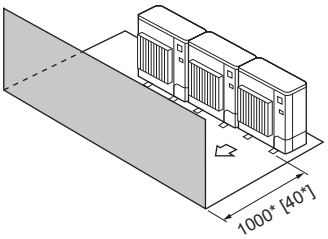

Fig. 2-14

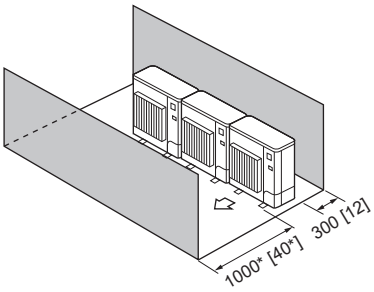

Fig. 2-15

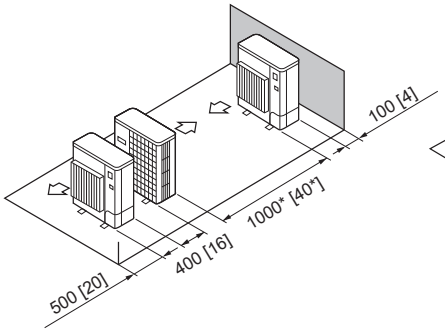

Fig. 2-16

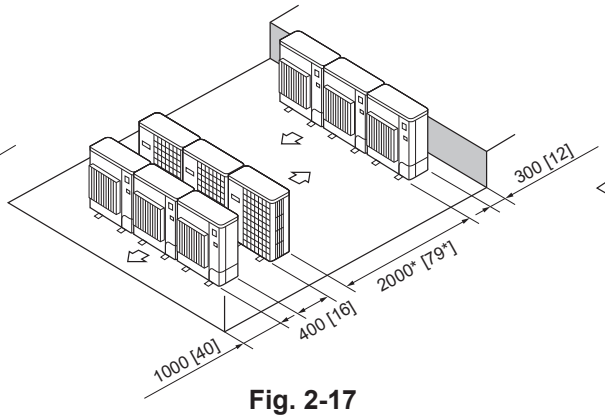

Fig. 2-17

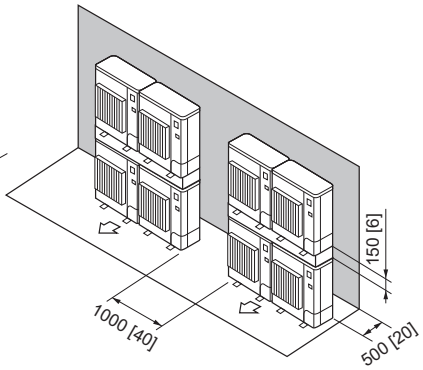

Fig. 2-18

en

2.5. Minimum installation area

■ Indoor units

Install in a room with a floor area of A_{min} or more, corresponding to refrigerant quantity M (factory-charged refrigerant + locally added refrigerant).

* For the factory-charged refrigerant amount, refer to the spec nameplate or installation manual.
  For the amount to be added locally, refer to the installation manual.
* For ducted systems to one or more rooms, first determine the system's refrigerant amount, then refer to the indoor unit installation manual for each room's restriction for minimum area.

The mounting height of indoor unit shall be 5.9 ft (1.8 m) or more from the floor, excluding ceiling concealed (PEAD), multi-position air handler (PVA) and A-Coil (PAA).

* There are restrictions in installation height for each model, so read the installation manual for the particular unit.

M			A_{min}	
[kg]	[lbs, oz]		[m²]	[ft²]
2.0	4	6	7.5	81
2.5	5	8	9.3	101
3.0	6	9	11.2	121
3.5	7	11	13.0	140
4.0	8	13	14.9	161
4.5	9	14	16.7	180
4.6	10	2	17.1	185
4.7	10	5	17.5	189
4.8	10	9	17.8	192
4.9	10	12	18.2	196
5.0	11	0	18.6	201
5.1	11	3	18.9	204
5.2	11	7	19.3	208
5.3	11	10	19.7	213
5.4	11	14	20.0	216
5.5	12	2	20.4	220
5.6	12	5	20.8	224
5.7	12	9	21.2	229
5.8	12	12	21.5	232
5.9	13	0	21.9	236
6.0	13	3	22.3	241
6.1	13	7	22.6	244
6.2	13	10	23.0	248
6.3	13	14	23.4	252
6.4	14	1	23.8	257
6.5	14	5	24.1	260
6.6	14	8	24.5	264
6.7	14	12	24.9	269
6.8	14	15	25.2	272
6.9	15	3	25.6	276
7.0	15	6	26.0	280
7.1	15	10	26.3	284
7.2	15	13	26.7	288
7.3	16	1	27.1	292

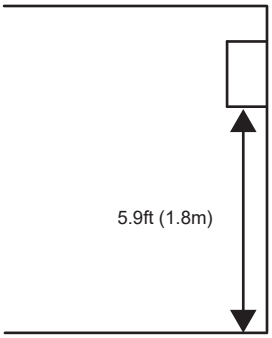

en

3. Installing the outdoor unit

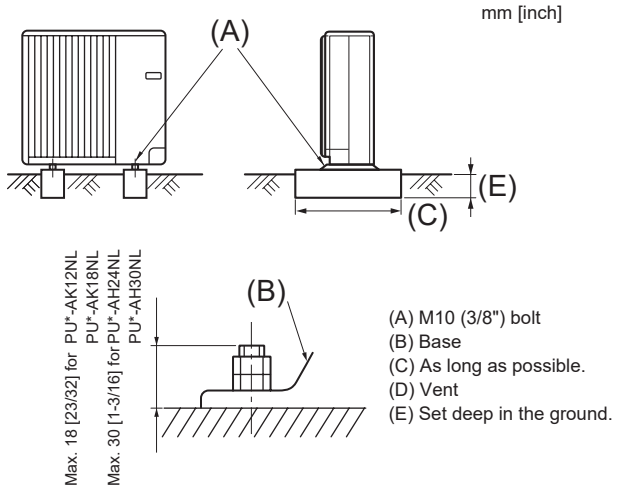

■ **PU*-AK12NL**
PU*-AK18NL

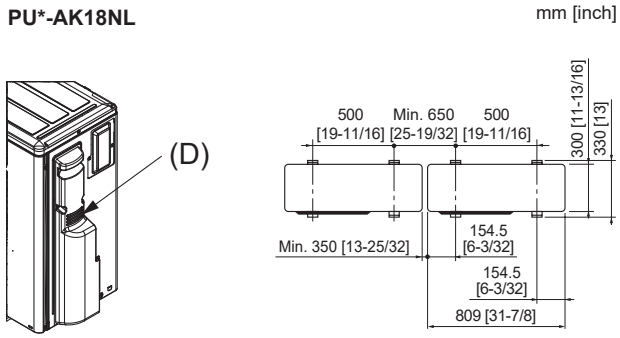

■ **PU*-AH24NL**
PU*-AH30NL

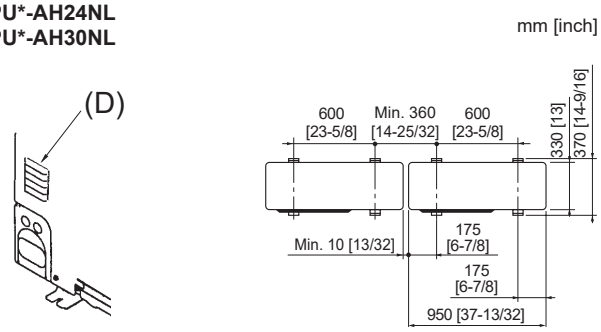

Fig. 3-1

- Be sure to install the unit in a sturdy, level surface to prevent rattling noises during operation. (Fig. 3-1)

<Foundation specifications>

Foundation bolt	M10 (3/8")
Thickness of concrete	120 mm, 4-23/32 inch
Length of bolt	70 mm, 2-3/4 inch
Weight-bearing capacity	320 kg, 264 lbs

- Check that the length of the foundation bolt from the base is within the following lengths:
  18 mm, 23/32 inch for PU*-AK12NL and PU*-AK18NL
  30 mm, 1-3/16 inch for PU*-AH24NL and PU*-AH30NL
- Secure the base of the unit firmly with four-M10 foundation bolts in sturdy locations.

Installing the outdoor unit

- Do not block the vent. If the vent is blocked, operation will be hindered and breakdown may result.
- In addition to the unit base, use the installation holes on the back of the unit to attach wires, etc., if necessary to install the unit. Use self-tapping screws (ø5 × 15 mm, ø13/16 × 19/32 inch or less) and install on site.
- Hold designated positions such as handles to move the unit when adjusting the installation position.

⚠ **Warning:**

- **The unit must be securely installed on a structure that can sustain its weight. If the unit is mounted on an unstable structure, it may fall down and cause damage or injuries.**
- **The unit must be installed according to the instructions in order to minimize the risk of damage from earthquakes, typhoons, or strong winds. An incorrectly installed unit may fall down and cause damage or injuries.**

en

4. Installing the refrigerant piping

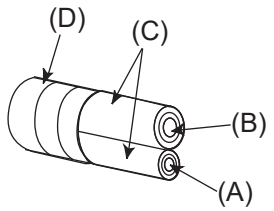

(A) Liquid pipe
(B) Gas pipe
(C) Insulation
(D) Taping

Fig. 4-1

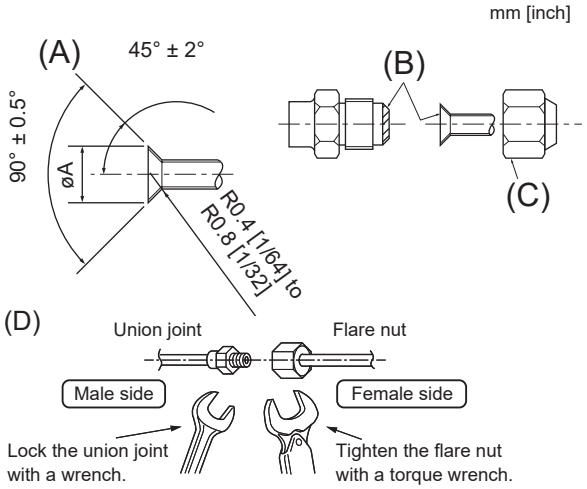

(A) Flare cutting dimensions
(D) Flare nut tightening torque

Fig. 4-2

		PU*-AK12NL PU*-AK18NL	PU*-AH24NL PU*-AH30NL
Gas side	Pipe size (mm, inch)	ø12.7, 1/2”	ø15.88, 5/8”
Liquid side	Pipe size (mm, inch)	ø6.35, 1/4”	ø9.52, 3/8”

(A) (Fig. 4-2)

Copper pipe O.D.		Flare dimensions øA dimensions	
(mm)	(inch)	(mm)	(inch)
ø6.35	1/4”	8.7 - 9.1	11/32 - 23/64
ø9.52	3/8”	12.8 - 13.2	1/2 - 33/64
ø12.7	1/2”	16.2 - 16.6	41/64 - 21/32
ø15.88	5/8”	19.3 - 19.7	49/64 - 25/32

(B) (Fig. 4-2)

Copper pipe O.D.		Flare nut O.D.		Tightening torque	
(mm)	(inch)	(mm)	(inch)	(N·m)	(ft·lbs)
ø6.35	1/4”	17	43/64	14 - 18	10 - 13
ø9.52	3/8”	22	7/8	34 - 42	25 - 30
ø12.7	1/2”	26	1 - 3/64	49 - 61	35 - 44
ø15.88	5/8”	29	1 - 9/64	68 - 82	49 - 59

4.1. Precautions for devices that use R454B refrigerant

- **Refer to 1.5. for precautions not included below on using air conditioners with R454B refrigerant.**
- **Use ester oil, ether oil, alkylbenzene oil (small amount) as the refrigeration oil applied to the flared sections.**
- **Use C1220 copper phosphorus, for copper and copper alloy seamless pipes, to connect the refrigerant pipes. Use refrigerant pipes with the thicknesses specified in the table to the below. Make sure the insides of the pipes are clean and do not contain any harmful contaminants such as sulfuric compounds, oxidants, debris, or dust.**

⚠ **Warning:**
When installing or relocating, or servicing the air conditioner, use only the specified refrigerant (R454B) to charge the refrigerant lines. Do not mix it with any other refrigerant and do not allow air to remain in the lines.
If air is mixed with the refrigerant, then it can be the cause of abnormal high pressure in the refrigerant line, and may result in an explosion and other hazards.
The use of any refrigerant other than that specified for the system will cause mechanical failure or system malfunction or unit breakdown. In the worst case, this could lead to a serious impediment to securing product safety.

	PU*-AK12NL PU*-AK18NL	PU*-AH24NL PU*-AH30NL
Liquid pipe	ø6.35 mm, 1/4 inch thickness 0.8 mm, 1/32 inch	ø9.52 mm, 3/8 inch thickness 0.8 mm, 1/32 inch
Gas pipe	ø12.7 mm, 1/2 inch thickness 0.8 mm, 1/32 inch	ø15.88 mm, 5/8 inch thickness 1.0 mm, 3/64 inch

- **Do not use pipes thinner than those specified above.**

4.2. Connecting pipes (Fig. 4-1) (Fig. 4-2)

When commercially available copper pipes are used, inslate both the liquid and gas pipes separately with commercially available insulation materials (heat-resistant to 100 °C, 212 °F or more, thickness of 12 mm, 1/2 inch or more). (Fig. 4-1)

- The indoor parts of the drain pipe should be wrapped with polyethylene foam insulation materials (specific gravity of 0.03, thickness of 9 mm, 23/64 inch or more).

[Fig. 4-2]
- Apply thin layer of refrigerant oil to pipe and joint seating surface before tightening flare nut. (A)
- Apply refrigerating machine oil over the entire flare seat surface. (B)
- Use the flare nuts for the following pipe size. (C)
- For connection, first align the center, then tighten the first 3 to 4 turns of flare nut by hand.
- Use 2 wrenches to tighten piping connections. (D)
- Use leak detector or soapy water to check for gas leaks after connections are completed.

Notes:
*: The flare nut is supplied as an outdoor unit accessory.
Be sure to use it otherwise gas leakage or even pipe extraction may occur.
- When bending the pipes, be careful not to break them. Bend radii of 100 mm, 3-15/16 inch to 150 mm, 5-27/32 inch are sufficient.
- Make sure the pipes do not contact the compressor. Abnormal noise or vibration may result.

(1) Pipes must be connected starting from the indoor unit.
Flare nuts must be tightened with a torque wrench.
(2) Flare the liquid pipes and gas pipes and apply a thin layer of refrigeration oil (Applied on site).

⚠ **Warning:**
When installing the unit, securely connect the refrigerant pipes before starting the compressor.

en

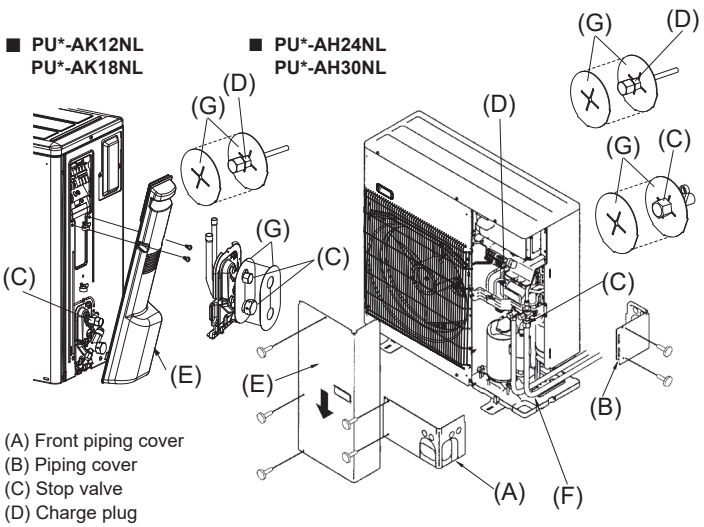

(A) Front piping cover
(B) Piping cover
(C) Stop valve
(D) Charge plug
(E) Service panel
(F) Bend radius : 100 mm, 3-15/16 inches -150 mm, 5-27/32 inches
(G) Red marking

Fig. 4-3

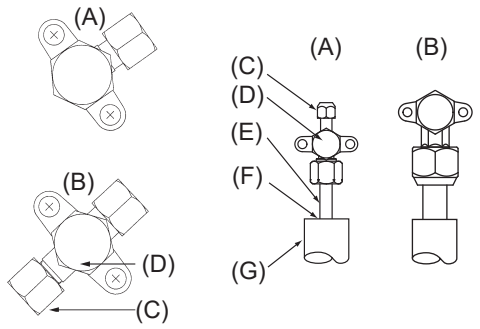

(A) Stop valve <Liquid side>
(B) Stop valve <Gas side>
(C) Service port
(D) Open/Close section
(E) Local pipe
(F) Sealed
(G) Pipe cover

Fig. 4-4

Charging procedures

In addition to conventional charging procedures, the following requirements shall be followed.

- Ensure that contamination of different refrigerants does not occur when using charging equipment. Hoses or lines shall be as short as possible to minimise the amount of refrigerant contained in them.
- Cylinders shall be kept in an appropriate position according to the instructions.
- Ensure that the refrigerating system is earthed prior to charging the system with refrigerant.
- Label the system when charging is complete (if not already).
- Extreme care shall be taken not to overfill the refrigerating system.
  Prior to recharging the system, it shall be pressure-tested with the appropriate purging gas. The system shall be leak-tested on completion of charging but prior to commissioning. A follow up leak test shall be carried out prior to leaving the site.

4.3. Refrigerant piping (Fig. 4-3)

Please carefully consider the indoor unit location when piping lengths are less than 25 ft. (7.5 m) as there could be intermittent noises during normal operation that would be noticeable in very quiet environments.

■ For PU*-AK12NL, PU*-AK18NL
Remove the service panel (E) **(2 screws).**
■ For PU*-AH24NL, PU*-AH30NL
Remove the service panel (E) **(3 screws) and the front piping cover** (A) **(2 screws) and rear piping cover (**B) **(2 screws)**

1. Perform refrigerant piping connections for the indoor/outdoor unit when the outdoor unit's stop valve is completely closed.
2. Vacuum-purge air from the indoor unit and the connection piping.
3. After connecting the refrigerant pipes, check the connected pipes and the indoor unit for gas leaks. (Refer to 4.4.)
4. Vacuumize the refrigerant lines through the service port of the liquid stop valve and then open the stop valves completely (for both the liquid and gas stop valves). This will completely connect the refrigerant lines of the indoor and outdoor units.
   - If the stop valves are left closed and the unit is operated, the compressor and control valves will be damaged.
   - Use a leak detector or soapy water to check for gas leaks at the pipe connection sections of the outdoor unit.
   - Do not use the refrigerant from the unit to purge air from the refrigerant lines.
   - After the valve work is completed, tighten the valve caps to the correct torque: 20 to 25 N·m, 14 to 18 ft·lbs (200 to 250 kgf·cm).
     Failure to replace and tighten the caps may result in refrigerant leakage. In addition, do not damage the insides of the valve caps as they act as a seal to prevent refrigerant leakage.
5. Use sealant to seal the ends of the thermal insulation around the pipe connection sections to prevent water from entering the thermal insulation.
6. After charging the refrigerant into the indoor and outdoor unit, please write down the date in the "DATE OF FIRST CHARGE" column on the name plate of indoor and outdoor unit.

Notes:
The red markings (G) indicate that the flammable refrigerant is charged.
If you remove the markings, put them back to the original position after the work is completed.

4.4. Refrigerant Pipe Nitrogen Pressure Test Method

(1) Connect the testing tools.
- Make sure the stop valves (A) (B) are closed and do not open them.
- Add pressure to the refrigerant lines through the service port. <Removed "(C) of the liquid stop valve (D)">

(2) Do not add pressure to the specified pressure all at once; add pressure little by little.
1. Pressurize to 0.5 MPa (73 psig, 5 kgf/cm^{2}G), wait 5 minutes, and make sure the pressure does not decrease.
2. Pressurize to 1.5 MPa (218 psig, 15 kgf/cm^{2}G), wait 5 minutes, and make sure the pressure does not decrease.
3. Pressurize to 4.15 MPa (602 psig, 41.5 kgf/cm^{2}G) and measure the surrounding temperature and refrigerant pressure.

(3) If the specified pressure holds for about 24 hours and does not decrease, the pipes have passed the test and there are no leaks.
- If the surrounding temperature changes by 1 °C, the pressure will change by about 0.01 MPa (0.1 kgf/cm^{2}G). Make the necessary corrections.

(4) If the pressure decreases in steps (2) or (3), there is a gas leak. Look for the source of the gas leak.

Detection of flammable refrigerants

Under no circumstances shall potential sources of ignition be used in the searching for or detection of refrigerant leaks. A halide torch (or any other detector using a naked flame) shall not be used.
The following leak detection methods are deemed acceptable for all refrigerant systems.
Electronic leak detectors may be used to detect refrigerant leaks but, in the case of flammable refrigerants, the sensitivity may not be adequate, or may need re-calibration. (Detection equipment shall be calibrated in a refrigerant-free area.) Ensure that the detector is not a potential source of ignition and is suitable for the refrigerant used. Leak detection equipment shall be set at a percentage of the LFL of the refrigerant and shall be calibrated to the refrigerant employed, and the appropriate percentage of gas (25% maximum) is confirmed.
Leak detection fluids are also suitable for use with most refrigerants but the use of detergents containing chlorine shall be avoided as the chlorine may react with the refrigerant and corrode the copper pipe-work.

If a leak is suspected, all naked flames shall be removed/extinguished.
If a leakage of refrigerant is found which requires brazing all of the refrigerants shall be recovered from the system, or isolated (by means of shut off valves) in a part of the system remote from the leak.

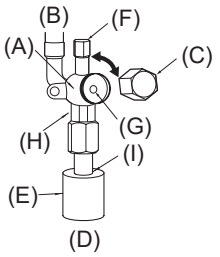

Fig. 4-5

4.5. Stop valve opening method (Fig. 4-5)

1. Remove the cap and turn the valve rod counterclockwise as far as it will go with the use of a 4 mm, 5/32 inch hexagonal wrench. Stop turning when it hits the stopper.
2. Make sure that the stop valve is open completely, push in the handle and rotate the cap back to its original position.

(A) Valve body
(B) Unit side
(C) Cap
(D) Local pipe side
(E) Pipe cover
(F) Service port
(G) Valve stem
(H) Double spanner section
(Do not apply a spanner other than to this section. Doing so would cause refrigerant leaks.)
(I) Seal section
(Seal the end of the heat insulation material at the pipe connection section with whatever seal material you have on hand so that water does not infiltrate the heat insulation material.)

Refrigerant pipes are protectively wrapped for PU*-AH24NL, PU*-AH30NL
- The pipes can be protectively wrapped up to a diameter of ø90 mm, 3-35/64 inches before or after connecting the pipes. Cut out the knockout in the pipe cover following the groove and wrap the pipes.

Pipe inlet gap for PU*-AH24NL, PU*-AH30NL
- Use putty or sealant to seal the pipe inlet around the pipes so that no gaps remain. (If the gaps are not closed, noise may be emitted or water and dust will enter the unit and breakdown may result.)

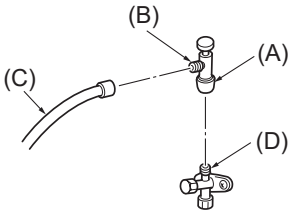

Notes:
1. The figure to the left is an example only. The stop valve shape, service port position, etc., may vary according to the model.
2. Turn section (A) only.
(Do not further tighten sections (A) and (B) together.)

(C) Charge hose
(D) Service port

Fig. 4-6

Precautions when using the charge valve (Fig. 4-6)
Do not tighten the service port too much when installing it, otherwise, the valve core could be deformed and become loose, causing a gas leak.
After positioning section (B) in the desired direction, turn section (A) only and tighten it. Do not further tighten sections (A) and (B) together after tightening section (A).

⚠ **Warning:**
When opening or closing the valve below freezing temperatures, refrigerant may spurt out from the gap between the valve stem and the valve body, resulting in injuries.

5. Drainage piping work

Outdoor unit drainage pipe connection
When drain piping is necessary, use the drain socket or the drain pan (option).

	PU*-AK12NL PU*-AK18NL	PU*-AH24NL PU*-AH30NL
Drain socket	PAC-SJ08DS-E	PAC-SG61DS-E
Drain pan	PAC-SG63DP-E	PAC-SG64DP-E

6.1. Outdoor unit (Fig. 6-1, Fig. 6-2)

1. Remove the service panel.
2. Wire the cables referring to the Fig. 6-1 and the Fig. 6-2.

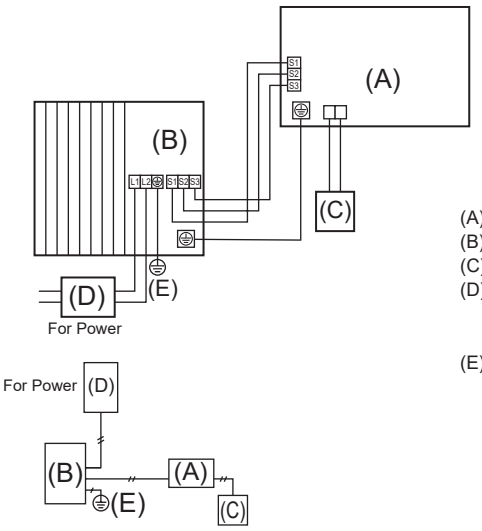

(A) Indoor unit
(B) Outdoor unit
(C) Remote controller
(D) Switch (Breakers for Wiring and Current Leakage (if you use))
(E) Earth

Fig. 6-1

■ **PU*-AK12NL**
PU*-AK18NL

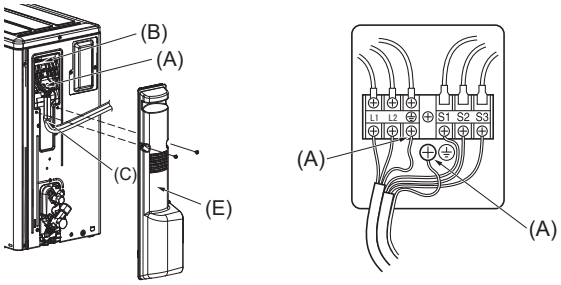

■ **PU*-AH24NL**
PU*-AH30NL

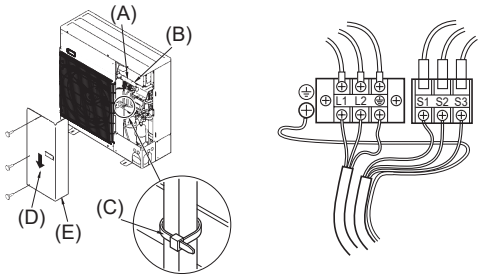

(A) Earth
(B) Terminal block
(C) Clamp
(D) Service panel
(E) Wire the cables so that they do not contact the center of the service panel or the gas valve.

Fig. 6-2

■ **PU*-AK12NL**
PU*-AK18NL

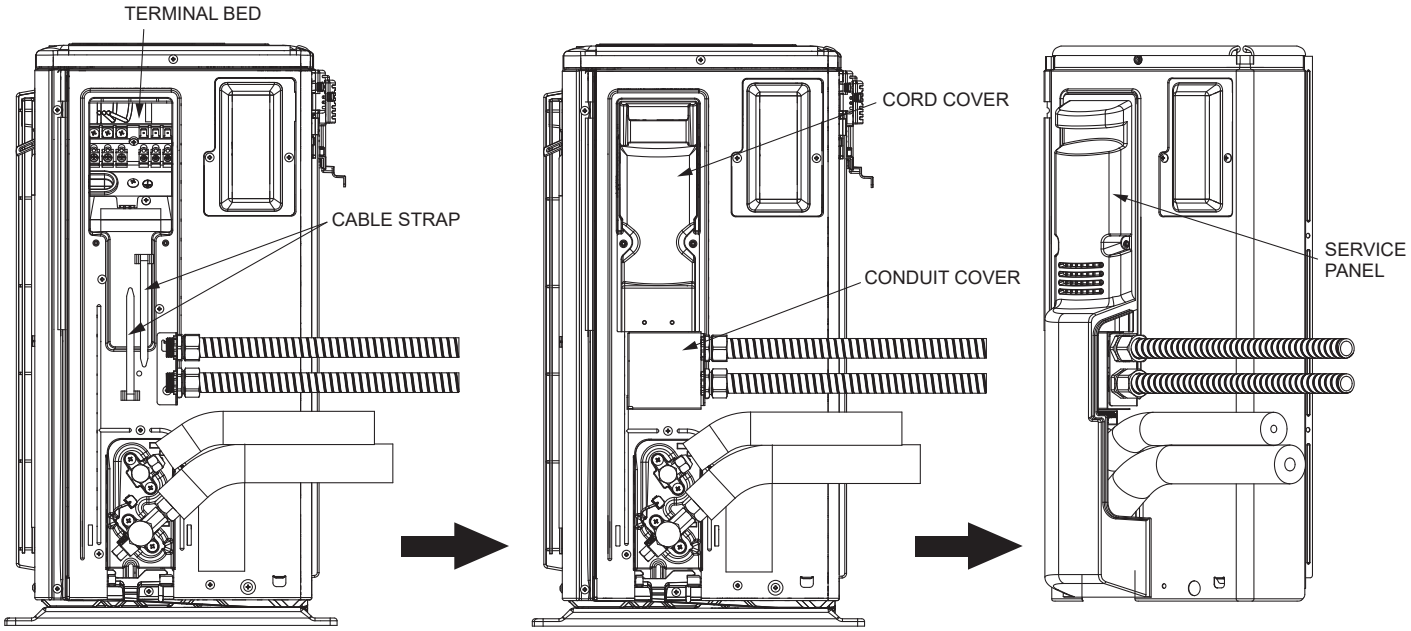

■ **PU*-AH24NL**
PU*-AH30NL

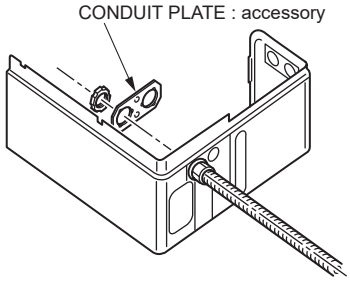

IMPORTANT NOTES

Check that cabling will not be subject to wear, corrosion, excessive pressure, vibration, sharp edges or any other adverse environmental effects. The check shall also take into account the effects of aging or continual vibration from sources such as compressor or fans.

6.2. Field electrical wiring

Outdoor unit model		PU*-AK12NL	PU*-AK18NL	PU*-AH24NL	PU*-AH30NL
Outdoor unit power supply		~/N (single), 60 Hz, 208/230 V	~/N (single), 60 Hz, 208/230 V	~/N (single), 60 Hz, 208/230 V	~/N (single), 60 Hz, 208/230 V
Breaker size	*1	20 A	20 A	25 A	25 A
Minimum circuit ampacity		16 A	16 A	22 A	22 A
Maximum rating of overcurrent protective device		27 A	27 A	37 A	37 A
Wiring Wire No. x size (mm^2)	Outdoor unit power supply	2 × Min. AWG 14	2 × Min. AWG 14	2 × Min. AWG 12	2 × Min. AWG 12
	Outdoor unit power supply earth	1 × Min. AWG 12	1 × Min. AWG 12	1 × Min. AWG 10	1 × Min. AWG 10
	Indoor unit-Outdoor unit *2	3 × AWG 14 (polar)	3 × AWG 14 (polar)	3 × AWG 14 (polar)	3 × AWG 14 (polar)
	Indoor unit-Outdoor unit earth *2	1 × Min. AWG 14	1 × Min. AWG 14	1 × Min. AWG 14	1 × Min. AWG 14
	Remote controller-Indoor unit *3	2 × AWG 22 (Non-polar)	2 × AWG 22 (Non-polar)	2 × AWG 22 (Non-polar)	2 × AWG 22 (Non-polar)
Circuit rating	Outdoor unit L1-L2 (single) *4	208/230 V AC	208/230 V AC	208/230 V AC	208/230 V AC
	Indoor unit-Outdoor unit S1-S2 (single) *4	208/230 V AC	208/230 V AC	208/230 V AC	208/230 V AC
	Indoor unit-Outdoor unit S2-S3 (single) *4	27 V DC	27 V DC	27 V DC	27 V DC
	Remote controller-Indoor unit *4	12 V DC	12 V DC	12 V DC	12 V DC

*1. Please follow applicable federal, state, or local codes to prevent potential leakage/electric shock. Or install a ground fault interrupt for the prevention of leakage and electric shock.

IMPORTANT
If you use current leakage breaker, it should be compatible with higher harmonics as this unit is equipped with an inverter. The use of an inadequate breaker can cause the incorrect operation of inverter.

*2. Max. 45 m, 147 ft
If 2.5 mm^2 used, Max. 50 m, 164 ft
If 2.5 mm^2 used and S3 separated, Max. 80 m, 262 ft
*3. The 10 m, 30 ft wire is attached in the remote controller accessory. Max. 1500 ft
*4. The figures are NOT always against the ground.
S3 terminal has 27 V DC against S2 terminal. However between S3 and S1, these terminals are NOT electrically insulated by the transformer or other device.

Notes:
1. **Wiring size must comply with the applicable local and national code.**
2. **Use copper supply wires.**
3. **Use wires rated 600 V or more for the power supply cables and the indoor/outdoor unit connecting cables.**
4. **Power supply cords, the Indoor-Outdoor connecting cable and the water heater-Outdoor connecting cable shall not be lighter than polychloroprene sheathed flexible cord. (Design 60245 IEC 57)**
5. **Use an earth wire which is longer than the other cords so that it will not become disconnected when tension is applied.**
6. **The appliance shall be installed in accordance with national wiring regulations.**

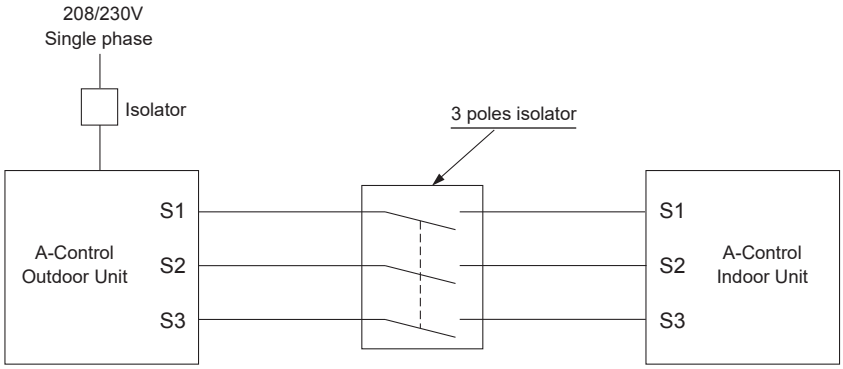

⚠ **Warning:**
For A-control wiring, there is high voltage potential on the S3 terminal caused by electrical circuit design that has no electrical insulation between power line and communication signal line. Therefore, please turn off the main power supply when servicing. And do not touch the S1, S2, S3 terminals when the power is energized. If isolator should be used between indoor unit and outdoor unit, please use 3-pole type.

Never splice the power cable or the indoor-outdoor connection cable, otherwise it may result in a smoke, a fire or communication failure.

⚠ **Warning:**
LEAK DETECTION SYSTEM installed. Unit must be powered except for service.
(Refrigerant sensors are not installed in some indoor units. Refer to the installation manual for the indoor unit whether an alarm is installed or not.)
The local switch and the breaker shall be always ON except during servicing.
Explain to customers to affix the included labels (Fig.6-3) both on the main breaker and the sub-panel.
If the local switch or the breaker is OFF, the refrigerant sensor cannot detect the refrigerant leakage since the electricity is not supplied.

Fig. 6-3

en

7. Test run

7.1. Before test run

► **After completing installation and the wiring and piping of the indoor and outdoor units, check for refrigerant leakage, looseness in the power supply or control wiring, wrong polarity, and no disconnection of one phase in the supply.**

► **Use a 500-volt megohmmeter to check that the resistance between the power supply terminals and ground is at least 1 MΩ.**

► **Do not carry out this test on the control wiring (low voltage circuit) terminals.**

⚠ **Warning:**

Do not use the air conditioner if the insulation resistance is less than 1 MΩ.

Insulation resistance

After installation or after the power source to the unit has been cut for an extended period, the insulation resistance will drop below 1 MΩ due to refrigerant accumulating in the compressor. This is not a malfunction. Perform the following procedures.

1. Remove the wires from the compressor and measure the insulation resistance of the compressor.
2. If the insulation resistance is below 1 MΩ, the compressor is faulty or the resistance dropped due the accumulation of refrigerant in the compressor.
3. After connecting the wires to the compressor, the compressor will start to warm up after power is supplied. After supplying power for the times indicated below, measure the insulation resistance again.
   - The insulation resistance drops due to accumulation of refrigerant in the compressor. The resistance will rise above 1 MΩ after the compressor is warmed up for 12 hours.
     (The time necessary to warm up the compressor varies according to atmospheric conditions and refrigerant accumulation.)
   - To operate the compressor with refrigerant accumulated in the compressor, the compressor must be warmed up at least 12 hours to prevent breakdown.
4. If the insulation resistance rises above 1 MΩ, the compressor is not faulty.

⚠ **Caution:**

- **The compressor will not operate unless the power supply phase connection is correct.**
- **Turn on the power at least 12 hours before starting operation.**
- Starting operation immediately after turning on the main power switch can result in severe damage to internal parts. Keep the power switch turned on during the operational season.

► **The followings must be checked as well.**

- The outdoor unit is not faulty. LED1 and LED2 on the control board of the outdoor unit flash when the outdoor unit is faulty.
- Both the gas and liquid stop valves are completely open.
- A protective sheet covers the surface of the DIP switch panel on the control board of the outdoor unit. Remove the protective sheet to operate the DIP switches easily.
- Make sure that the all of the SW5 DIP switches for function changes on the control board of the outdoor unit are set to OFF. If all of the SW5 switches are not set to OFF, record the settings and then set all of the switches to OFF. Begin recovering the refrigerant. After moving the unit to a new location and completing the test run, set the SW5 switches to the previously recorded settings.

7.2. Test run

7.2.1. Using SW4 in outdoor unit

1) PUZ Type

SW4-1	ON	Cooling operation
SW4-2	OFF	
SW4-1	ON	Heating operation
SW4-2	ON	

2) PUY Type

SW4-1	ON	Cooling operation
SW4-2	ON or OFF	

* After performing the test run, set SW4-1 to OFF.

- After power is supplied, a small clicking noise may be heard from the inside of the outdoor unit. The electronic expansion valve is opening and closing. The unit is not faulty.
- A few seconds after the compressor starts, a clanging noise may be heard from the inside of the outdoor unit. The noise is coming from the check valve due to the small difference in pressure in the pipes. The unit is not faulty.

The test run operation mode cannot be changed by DIP switch SW4-2 during the test run. (To change the test run operation mode during the test run, stop the test run by DIP switch SW4-1. After changing the test run operation mode, resume the test run by switch SW4-1.)

7.2.2. Using remote controller

Refer to the indoor unit installation manual.

Note: Occasionally,vapor that is made by the defrost operation may seem as if smoke come up from the outdoor unit.

en

8. Special functions

8.1. Refrigerant collecting (pump down)

Perform the following procedures to collect the refrigerant when moving the indoor unit or the outdoor unit.

1. Supply power (circuit breaker).
   - When power is supplied, make sure that “CENTRALLY CONTROLLED” is not displayed on the remote controller. If “CENTRALLY CONTROLLED” is displayed, the refrigerant collecting (pump down) cannot be completed normally.
   - Start-up of the indoor-outdoor communication takes about 3 minutes after the power (circuit breaker) is turned on. Start the pump-down operation 3 to 4 minutes after the power (circuit breaker) is turned ON.
2. After the liquid stop valve is closed, set the SWP switch on the control board of the outdoor unit to ON. The compressor (outdoor unit) and fans (indoor and outdoor units) start operating and refrigerant collecting operation begins. LED1 and LED2 on the control board of the outdoor unit are lit.
   - Only set the SWP switch (push-button type) to ON if the unit is stopped. However, even if the unit is stopped and the SWP switch is set to ON less than 3 minutes after the compressor stops, the refrigerant collecting operation cannot be performed. Wait until compressor has been stopped for 3 minutes and then set the SWP switch to ON again.
3. Because the unit automatically stops in about 2 to 3 minutes when the refrigerant collecting operation is completed (LED1 off, LED2 lit), be sure to quickly close the gas stop valve. If LED1 is lit and LED 2 is off and the outdoor unit is stopped, refrigerant collection is not properly performed. Open the liquid stop valve completely, and then repeat step 2 after 3 minutes have passed.
   - If the refrigerant collecting operation has been completed normally (LED1 off, LED2 lit), the unit will remain stopped until the power supply is turned off.
4. Turn off the power supply (circuit breaker).
   - Note that when the extension piping is very long with large refrigerant amount, it may not be possible to perform a pump-down operation. When performing the pump-down operation, make sure that the low pressure is lowered to near 0 MPa (gauge).

⚠ **Warning:**

- **When pumping down the refrigerant, stop the compressor before disconnecting the refrigerant pipes. The compressor may burst if air etc. get into it.**
- **Do not perform pump down work when there is a gas leak. The intake of air or other gases causes abnormally high pressure in the refrigeration cycle, which may cause explosion or injury.**

9. System control (Fig. 9-1)

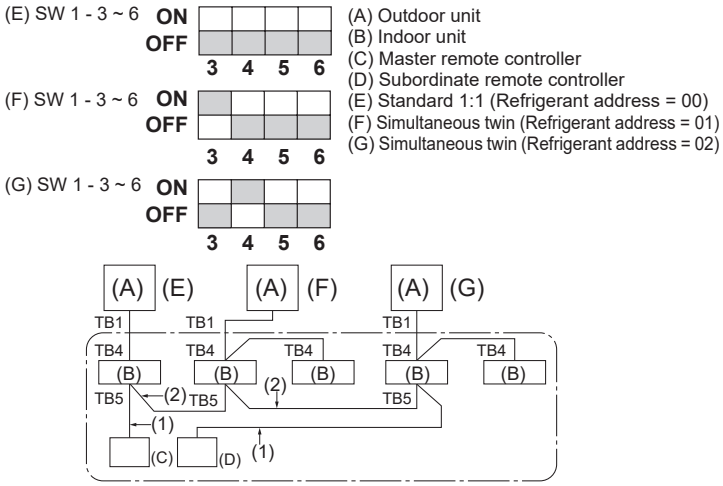

Fig. 9-1

- Set the refrigerant address using the DIP switch of the outdoor unit.

1. Wiring from the Remote Control
   This wire is connected to TB5 (terminal board for remote controller) of the indoor unit (non-polar).
2. When a Different Refrigerant System Grouping is Used.
   Up to 16 refrigerant systems can be controlled as one group using the slim MA remote controller.

Note:
In single refrigerant system (twin), there is no need of wiring 2**.**

SW1
Function table

<SW1>

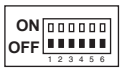

	Function	Operation according to switch setting	
		ON	OFF
SW1 function settings	1 Compulsory defrosting	Start	Normal
	2 Error history clear	Clear	Normal
	3 4 5 6 Refrigerant system address setting	Settings for outdoor unit addresses 0 to 15	

10. Low ambient cooling

Precautions for low ambient cooling

- If the outdoor temperature is -5 °C, 23 °F or lower during cooling operation, install an optional air guide to prevent wind from blowing into the outdoor unit.
- Install the outdoor unit in a location where wind will not blow onto the back of the unit.
- To prevent damage to the parts, be sure to install the unit, turn on the main power, and perform service in an environment where the ambient temperature is -18 °C, 0 °F or higher.
- In order to protect the compressor and electrical components, do not turn off the circuit breaker if the unit is installed in an environment where the ambient temperature is -18 °C, 0 °F or lower.
- It needs at least 12hr standby to operation in order to warm the electrical parts.

en